International Journal of Agriculture and Crop Sciences.
Available online at www.ijagcs.com
IJACS/2014/7-14/1406-1416
ISSN 2227-670X ©2014 IJACS Journal

Design and Manufacture of an Appropriate Suspension Mechanism for the Wheels of the Tractor for Moving on Transveral slopes

Rohollah Mohammad Sanabadi Aziz[1]*, Amin Samieifar[2], Mohammad Hassan Mehrabani[3], Mansour Khaqanifar[3]

1. Research Instructor at the Technical and Engineering Research Institute of Jahade Keshavarzi
2. M-Sc. Mechanization, Engineering, Student of Khuzestan, Ramin Agriculture and Natural Resources University, Khuzestan, Iran.
3. Research Instructor at the Technical and Engineering Research Institute of Jahade Keshavarzi

***Corresponding author email:** rohollahmohammad@yahoo.com

ABSTRACT: The tractor is the main driving force of agricultural machinery in planting, growing and harvesting operations in the agriculture sector. The breadth of sloping and submontane lands in Iran intensifies the need for designing a tractor with the capability to transversely move on transverse slopes. Therefore, in this project, we attempted to offset the height difference of the two sides of the tractor by changing the height of the wheels by installing a brachial mechanism to the rear wheels and using the hydraulic force, which has shown successful theoretical and practical results in transverse slopes of up to 24.2°.The distance between the lower surface of this newly designed tractor with the land surface is 48 cm, giving it the capability to move its wheels up and down to the height of 48 cm in lands with different degrees of slope. The least amount of pressure to keep the balance between the axis s was calculated at 50 bar, which requires a piston with 63 mm of diameter. The tractor can change slope up to 19.2°by replacing the rear wheels. The tractor generally can be stable in up to 24.2° of angle change. The front axis of the tractor has been designed such that it has a 15°-30°angle fluctuation.
Keywords: Tractor, Slope-moving, Slope Sensors, Tractor Overturn

INTRODUCTION

Agriculture is among the most dangerous jobs with 8 times mortality and critical damages to the operator as do other vocations (Nameless, 2009). Tractor-related risks in the farm depend on stability, brakes, access to workplaces, control, operators, and also transferring the power from the tractor to other machineries (Campbell, 1990; Carlson et al, 2005).

The most important difficulty in this respect is the imbalance and overturning of the tractor to the side in sloping lands. Most of the time, tractors overturn in sloping farms when they quickly turn or hit obstacles and lose balance (Myerset, et al., 2006). Studies show that the largest slope on which an ordinary tractor can transversely move without overturning is 10-12 degrees. Using an electronic stability monitor to control these damages in agriculture sector is economical and can improve confidence in agricultural operations by using tractors and preventing tractor overturning (Nichol et al. 2005).

Due to the relatively extensive submontane and sloping lands in our country, a machine that can drive agricultural equipment on slopes would be very effective. Of course, in lands with steeper slopes or the above mentioned slopes, reciprocating movements in the direction of the slope is also used, backed by the driver's experience and particular skills.

Accident-preventing methods can be divided into the three groups of engineering, educational, and compulsory. In the engineering method, various safety features are dealt with to improve the safety of human resources (Ranjbar, 2002). Different studies have been performed worldwide, which have many problems at the manufacturing stage ; however, based on conducted research projects, a tractor with 17 hp that has been able to move on transferal slopes of up to 15°has proved useful (Tajiri, 1992).

The investigations show that the suitable slope for harvesting the grass by ordinary tractors is at most 35% (Handler and Wippl, 2004); while machines equipped with a slope-moving mechanism has the capability to move on slope of 60%-65%. Although it is costly to prepare these kinds of machinery, they improve the productivity of farms and the safety of the operator (Burkhalter, 2004).
The current research project aims to design, construct, and finally install a mechanism on the universal M650 model tractor with 65 hp (the Romanian tractor) to make it capable to move on transferal slopes of maximum 45% (24.2°) with an acceptable confidence coefficient and without overturning, such that suitable equipment for the farming operation can be easily connected to the tractor.

MATERIALS AND METHODS

Due to the wide range of working issues, the design, manufacturing and installation operations were divided into the following:
A movement mechanism in the vertical plate of rear wheels (height change) to balance and change the transverse slope of the tractor body
A mechanism for changing the position of the front axis and changing the angle between the front wheels and the sloping surface to prevent slipping on the slopes
A manual and automatic mechanism using sensitive sensors and circuits in full coordination with the hydraulic system
Real-time slope monitor

The Rear Wheel Movement and Steering Mechanism

The general diagram for designing and manufacturing the slope-moving tractor is presented as follows.

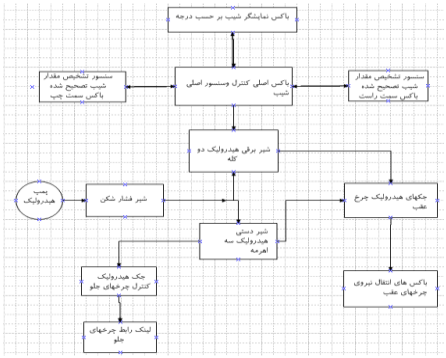

Figure 1. The General Diagram of the Slope-moving Tractor

Initial Calculations and Estimations of the Project

As the suspension and installation system of the front wheels are hinged to the tractor body through the front axis, and since the rear wheels tolerate much of the tractor weight and the propulsion power, major changes should apply to the rear wheels to make tractors move on slopes, such that the wheels are able to move up and down on the vertical plate to offset the slope, and rotational torque from the differential axis is transferred to the wheels with the least dissipation. Achieving this aim requires us to respond to the following questions.
a) On what kind of structures and in what distance should the wheels be located?
b) What mechanism and force does the structure beneath the wheels use to move the wheels?
c) In view of the applied changes, will the tractor overturn in the intended slope?
d) What mechanism transfers the output power of the differential axis to the new axis of the wheels?
In this project, using research and tested project on the Yanmar 17.5 hp tractor (Tajiri, 1992), the rear wheels were based on the L-shaped arms, such that, as figure 2 presents, the C point is the output axis of the tractor differential (the previous place of the tractor rear wheels, which acts as a driving axis in the arm). The wheel(s) is based on the D point on the moving axis in the arm, the B point on the other side of the arm is where the piston handle of the hydraulic jack is installed, and the A point is where the end of the cylinder connects to the tractor body (Sanbadi, 1998).

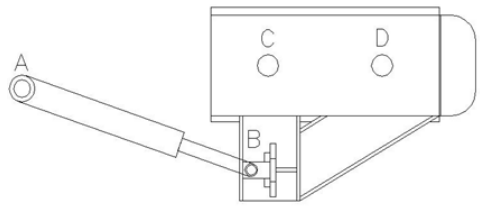

Figure 2. The general Scheme of the L-shaped Arm

Accordingly, due to the rigidness and uniformity of the BCD arm, and its connection to the piston handle of the hydraulic jack, if the B point rotates around the C axis as a result of the movement of the piston handle, the D point, which bears the wheel axis, will also rotate, such that the extent of the movement of the D point (wheel) is in direct relation with the CD distance and inverse relation with the CB distance (Figure 3).

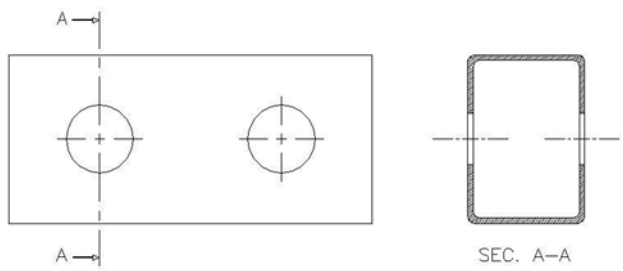

Figure 3. The Transverse Section of the Compartment of the Rear Arm (the CD linking structure).

Considering the size of the tractor wheel and its underneath attachments and equipment, the distance between the lower surface of the tractor and the land surface in normal conditions is about 48 cm, which means if any of the wheels moves up vertically more than 48 cm, the lower surface of the tractor will collide with the land. Therefore, taking into account the necessary space for stony surfaces and the natural and artificial barriers in the project, the extent of the wheel vertical movement (the upward movement of the rear wheel compared with the normal position of the tractor and moving horizontally) has been estimated at about 40 cm (Sanbadi 1998). Considering the exact position of the different parts and their manner of moving in the cinematic (the direction of the arm set), and the position of the hydraulic jack, the sizes of the diagram have been considered as the final characteristics of the project. Figures 4,5, and 6 present the different positions of the wheel and other attachments in view of the fact that the wheel should go upward or downward.

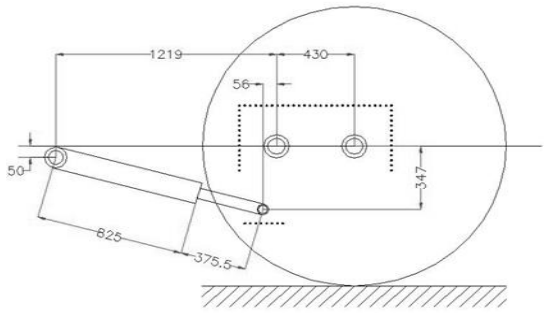

Figure 4. The jack is half-open

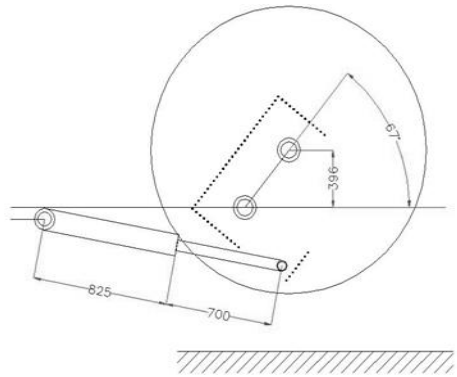

Figure 5. Jack came out to the end

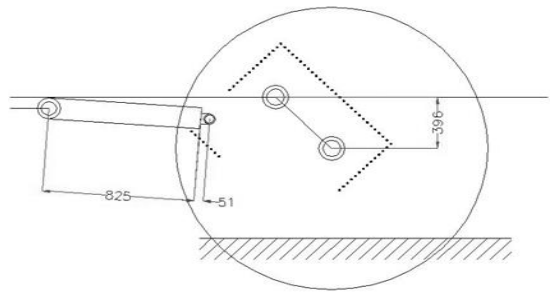

Figure 6. Jack has accumulated to the end

In figure 4, the wheel is in a position that the tractor is moving on an ordinary horizontal surface. In this position, both hydraulic jacks are half-open and power transfer arms on both sides are completely horizontal; as a result, no difference is seen in the height of the wheels compared with their main positions in the tractor. However, in figure 5, the jack is fully ejected and the wheel presents the upper side of the slope, which means the wheel has vertically moved up compared with its normal position. In figure 6, which shows the lower side of the slope, the jack is fully compressed, and this compression is exactly equal to its ejection in figure 5; as a result, the wheel has vertically moved down.

Choosing the Hydraulic Jacks of the Rear Wheels

Pascal's Law 1 is used to determine and select the diameter of the piston of the hydraulic jack as follows:

P=F/A,

Where P stands for the oil pressure (bar), F for force (Newton), and A for the effective cross-section of jack piston (square millimeter).

The effective pressure of the hydraulic system for an ideal tractor is 120 bar, according to the guidelines for maintenance of the (Romanian) Universal Tractor (BehroziLar, 2001). This number will certainly decrease as a result of the passage of time, the erosion of the components, and the engine output, etc.; therefore, the assumption is that the tractor's hydraulic system can provide, at least, 50 bar of pressure; thus:

$$50\ bar = 5\ {}^{N}\!/_{mm^2} \Rightarrow 5 = \frac{15637}{A} \Rightarrow A = 3127\ mm^2$$

If the entire surface of the piston acts as the effective surface of the hydraulic pressure, the appropriate diameter is 63mm.

The Calculation of Forces Exerted on the Tractor and Not-overturning:

In view of the above material, calculations and the calculated values of 80 cm for the height of the rear wheels and 230 cm for the distance between the (tractor) center and the rear wheel center, we have the following:

$$tg\theta = \frac{80}{230} = 0.348 \Rightarrow \theta = 19.2^{\circ}$$

is the maximum angle up to which the tractor body can change its transverse slope by moving the rear wheels. According to the force balance calculations in this project, the weight force of the tractor cannot overturn it,if the

transverse slope of its body is 5° in case of land's maximum slope, and the tractor will remain stable on a 24.2° transverse slope (45%).

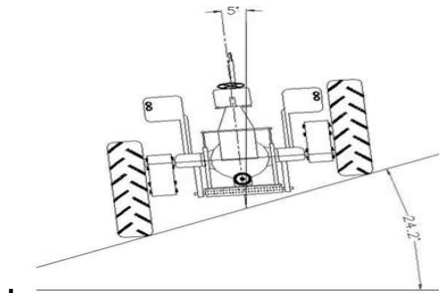

Figure 7. A Rear View of the Tractor on a 24.2˙ Transverse Slope

The Mechanism for the Front Wheel Angle Change

The linkage system of the front wheels is such that the two front wheels are located freewheeling on one axis, which can rotate around its linkage point to the tractor body in the middle under the tractor body; therefore, when the tractor moves on a transverse slope, this mechanism can turn around its linkage point to the body, such that both front wheels are always in contact with the land, irrespective of the position of the tractor body.

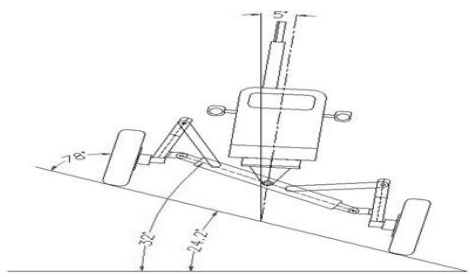

Figure 8. A view of the Front Axison the Slope, and the Angle it should form with the Body

The swing angle of the front axis on the vertical plate in an ordinary tractor is 15° at most, but the tractor in this project should be able to form a 19.2° angle with the sloping surface in 24.2° slopes; a mechanism has also been designed for changing the wheel angle with the sloping surface, by which the front shift should form an almost 30° angle with the body (Figure 8); to this purpose, the barrier surfaces on the axis and the tractor horse seat should completely be omitted. The tubers of the steering wheel should be milled according to the sketches, and their range of motion should be extend from 15° to 30°.To this end, the front wheels are hinged on the two sides of the axis and connected together with a linkage piece from above, such that the wheels are parallel in all situations, and if a wheel (the plate in which the wheel is located) forms an angle with the surface on which the tractor is moving (this angle is vertical horizontal) the other wheel will follow it to move and form an angle. A hydraulic jack is used to provide this driving force, such that the end of the jack is based on the front axis and its piston handle on the supporting arm of one of the wheels, using the tractor hydraulic oil pressure, which is controlled by the driver with a separate manual valve from the rear mechanism (BehroziLar, 2001).

Figure 9. The Real State of the Front Wheels on the Slope

The Slope Detection Mechanism with Sensor and the Electronic Circuits of the Slope Control

To optimize the project, lessen human interference with the tractor balance, and automate the slope-moving set of equipment, it was thought appropriate to use an automatic controlling system of the tractor transverse slope, besides the manual valves for controlling the path of hydraulic oil. The investigations show that existing electronic or mechanical sensors and slope gauges and necessary circuits can be used (Mahjoom, 2005). However, we preferred to design and make an electronic circuit sensor mechanism proportionate with the needs of the project due to high expenses of these kinds of equipment, their sensitivity, and considering the operation and maintenance conditions of the tractor.

The Operational Test of the Control Section of the Slope-moving Tractor

After successfully passing initial factory tests of the slope-moving control system, the tractor should be tested in environments with up to 24° of transverse slope to ensure its correct real performance. The slope-moving tractor was tested in this environment, which was acceptable as it was the first operational test of the system.

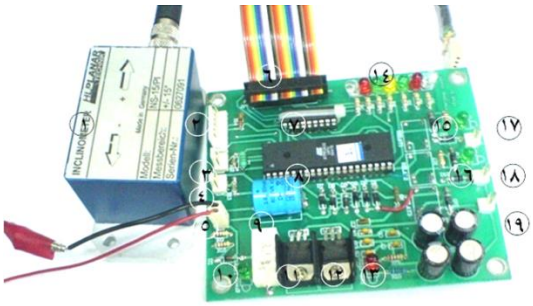

Figure 10. The Image of the Tested Board Assembly of the Slope Controller

Table 1 . The Explanation of the Elements on the Digital Control Board

1- Slope Sensor	11-Regulator
2- Slope Sensor Connector	12-Regulator
3- Potentiometer Connector Jack 1	13- Feeding LED
4-Potentiometer Connector Jack 2	14- Slope-indicator LEDs
5- Feeding Connector	15- Jack 1-command LED
6-Connector and Cable connected to the Monitor	16- Jack 2-command LED
7- IC	17- Connector Connected to the Relay of Jack 1
8-Microcontroller	18- Connector Connected to the Relay of Jack 2
9-Backup Battery	19- Connector Connected to the Alarm
10-Feeding LED	

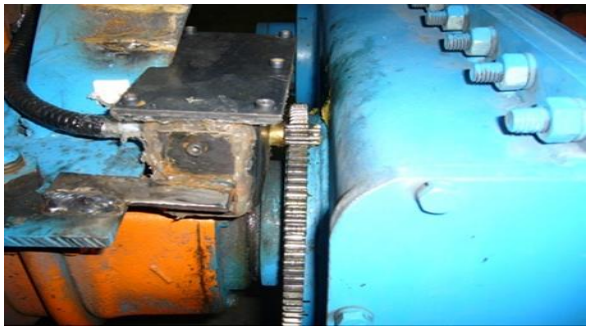

Figure 11. Installed on the gear box transmission

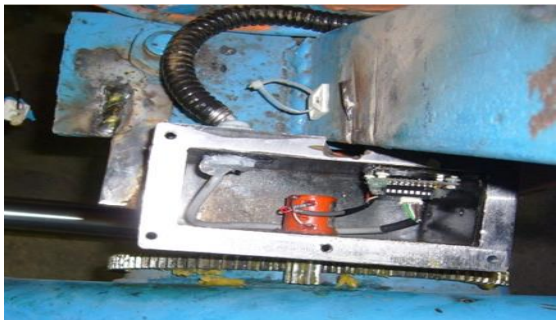

Figure 12. Instantaneous slope of the sensor box with gears and volume

The general flowchart of the final slope control program is presented in figure 13.

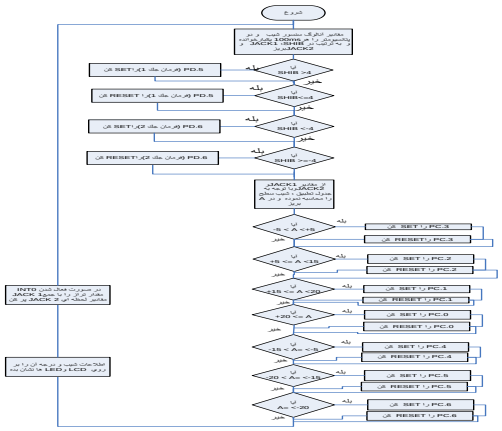

Figure 13 . The General Flowchart of the New Takesh Program

Hydraulic Control Circuits

A The hydraulic section is among sections that play an important role in the control and correction of the slope. This section consists of two main hydraulic jacks and fourlocking jacks, two of which are installed on each main jack to the end of the tractor. Also, a jack was used to change the angle of the front wheels with the sloping surface.

Figure 14. The Whole set of the Rear Jacks on the One Side

The role of the main jacks is to change the height of the rear wheels, in proportion with the slope, following the command of the control circuits and the hydraulic valves. The locking jacks also serve a sensitive role, that is, to keep the status of main jacks if the hydraulic jack does not operate for any reason. The failure of the hydraulic circuit might be caused by the tractor turning off in slopes, the rupture of the hydraulic hose, etc. The hydraulic jack and dependent circuits are used to control the angle of the front wheels (Figure 15). The hydraulic jacks are used to control and lift the rear wheels, and the hydraulic valves are used to drive these jacks.

Figure 15. The Front Wheel Jack

The Front Wheel Equipment Assembly

The changes to the front wheels should be such that, when the tractor moves on a slope, they are completely in line with the rear wheels to prevent the tractor overturning; to this purpose, the front horizontal and verticalaxes and the link required to implement the necessary angle change were completely welded, and a tuber link was also designed and constructed to let the driver fully control the steering wheel.

Figure 16. The Hinging Connection of the Front Wheel

The corn head has 4 rows, that is, four separating mechanisms; one mechanism received 10mm of altitude variance, another one received 15mm of it, and the other mechanisms remained intact so that the amount of loss in each harvesting path could be examined and the effect of the amount of altitude variance on the degree of grain loss could be measured.

Assembling the Control, Command, and the Slope Indicator Section

This section includes the main control box, slope monitor box and sensor boxes for measuring the instantaneous slope of the rear wheels

Assembling the Control and Command Box

This box, which is the main control and command box of the slope-moving tractor, includes the main sensor of the slope, the microcontroller board and the output command relays.

Figure 17. The Main Control and Command Box

Figure 18. The Installation Site of the Control Box Protective Frame

Assembling the Tractor's Slope Angle Indicator Box

To let the driver check the slope angle at any moment, the slope angle monitor has been constructed and installed in front of the steering wheel so the operator can easily see it.

Figure 19. The Slope Angle Monitor

RESULTS AND DISCUSSION

The results show that the outputaxesof the differential have functioned well as the rotation axis in the L-shaped arm, such that on the one side of the L-shaped arm, the wheel, and on the other side of the arm, the hydraulic jack piston, whose end is connected to the tractor body, have been installed. When the tractor is on a slope, the slope-gauge sensor commands the solenoid valve through sensitive electronic circuits, causing the rear wheels to move up or down, with changing the position of the pistons, in opposite directions to offset the slope. It is noteworthy that, the slope monitor shows the real slope at any moment, as every single degree is important for the operator. Analogue sensor used in the initial slope control system should have the following characteristics:

The RS-232 output

Feeding Voltage from 5-24 VDC

Sensor Operation Temperature from -25°C to +85°C

The tractor slope in a degree scale will be detected by the slope-gauge sensor, being sent as analogue and digital signals. These data will be received from the A/D section of the AVR microcontroller of the control board. The input angles will be detected by a software program to activate and deactivate the relays, and therewith, the hydraulic jacks; finally, the slope correction operation necessary for moving the tractor in the sloping surface will be performed (Kaheh, 2004).

Also to observe the security of the tractor operator in the slope, two potentiometers have been installed on the sprockets of the tractor rear wheels to transfer the data regarding the extent of the opening and closing of the hydraulic jacks at any moment, and thus the real slope of the tractor, to the control board microcontroller through the initializer board. The microcontroller used in the slope controller system, based on the input data and using the programmed software sends the commands to the LCD and LED of the monitor to inform the operator of the sloping surface, and playing the alarm in case of an overturning risk. Besides this sensor, two other sensors were added to the system, being installed on the axis of the rear wheels to compare the position of the rear jacks with

each other. The electronic section of this new system of slope control comprises three separate parts: 1- the slope control board, 2- surface slope measuring board, and 3- the surface slope monitor board.

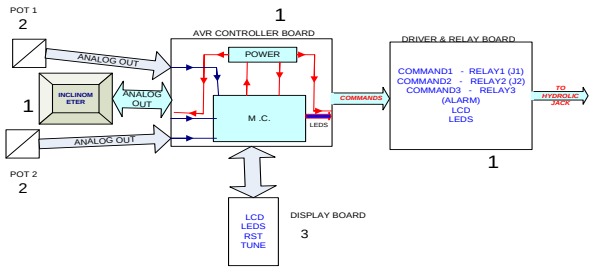

Figure 20. The General Diagram of the New Electronic Slope Control System

The main task of this board is to receive and process slope data from the sensors, send the commands for opening and closing the jacks based on the intensity of the slope, detect the real slope of the sloping surface by reading the changes in the values of the hydraulic jacks, show slope data on the LCD and LED, and play the alarm. The operation of this board based on its schematic circuit and the layout of the microcontroller pins is as follows. Initially, the analogue values created by the slope sensor and the potentiometers installed on jacks 1 and 2 will be read by port A, which has 8 A/D bases. Then, according to the written program, the commands of hydraulic jacks 1 and 2 will be issued by reading the value of SHIB, being sent to the hydraulic jacks through port D and the relays.

Reading the values of Jacks 1 and Jack 2, the board will send the data regarding the surface slope to the LCD of the monitor through port B, showing the slope degree on the LED of the monitor via port C. Also, if the slope exceeds the allowed limit, the controller board sends the alarm command through PD.2 to the relay and the alarm bell. This part of the project lets control the surface slope of the tractor with digital, besides analogue, sensors, which, in effect, removes the limitations of acquiring analogue sensors and its related problems; the selection of sensors will also be unlimited (Dibani, 1998). Furthermore, small micro-software changes in the digital sensors and slope-gauge systems, unlike in the analogue sensors, let us set different slopes as the comparison basis in the controller system, without needing hardware changes.

CONCLUSIONS

As the biggest problem for agricultural operations on sloping surfaces is the imbalance and the possibility of the tractor overturning, it is possible to offset the height difference on the two sides of the tractor by changing the height of the wheels using a suspension mechanism suitable for the front and rear wheels. This would facilitate the movement of the tractor on the transferal slopes of wide steep agricultural farms of the country. This, in turn, would increase the productivity of these farms; improve the safety and balance of the tractor, and prevent tractor overturning.

CONCLUSION

Results obtained from the harvests and their amounts of grain loss indicate that, in conventional headers wherein a vertical force is exerted to separate the stalks, damage to the crops is too great and the amount of less excessive. Given results of the present study and their significance as manifested on the cutter bars, it is necessary to make modifications to combine headers made in Iran so as to reduce the amount of grain loss in them. Attention should be paid to the materials used for the construction of headers, particularly the cutter bars, the straw walkers, the pulling chains and the axes so as to reduce the amount of loss at the combine header. Measuring grain moisture content, ensuring the proper rotation of the threshing drum and the concave and adjusting the space between them prior to starting the harvesting process greatly contribute to reducing the amount of grain loss we currently experience with combine corn heads.

REFERENCES

BehrouziLar M. 2001. Understanding the Usage of the Tractor. Amozesh Keshavarzi Publication.
Burkhalter R. 2004. Mitdem Tractors be 60% Hangneigung“. Die grüne 12, pp. 12-15.
Campbell B. 1990. Of primary concern: It’s getting safer, but farming is still the most dangerous industry. American Agriculturist, 187(9), 10-30.

Carlson KF, Gerberich SG, Church TR, Ryan AD, Alexander BH, Mongin SJ, Renier CM, Zhang X, French LR, Masten A.2005. Tractor-related injuries: A population-based study of a five-state region in the Midwest. American Journal of Industrial Medicine, 47, 254–264.
Dayyani M. 1998. The Electronic Art. The Publication of the Sharif University of Technology.
Handler F, Wippl J.2004. Special Machinery for Grassland Harvesting on Steep Slopes in Alpine Regions. Ag Eng 2004. Book of Abstracts, Part 1.
Kaheh A. 2004. The AVR Microcontrollers. The Nas Publication.
Mahjoom MS. 2005. The Design and Manufacture of Electronic Designs.
National Safety Council. 2009. Injury Facts, 2009 Edition. Itasca, IL.
Nichol CI, Sommer III HJ, Murphy DJ. 2005. Simplified overturn stability monitoring of agricultural tractors. Journal of Agricultural Safety and Health 11(1):99-108.
Ranjbar A, Qasemzadeh HR, Davoudi Sh. 2002. The Engine Power and the Tractor. The Publication of the University of Tabriz.
Sanabadi R. 1998. The Design and Reform of the Mechanism of the Slope-moving Tractor. Khorasan's Center for Engineering Research.
Tajiri I. 1988- 1992. A total ofprobesandarticles.University of, Japan.